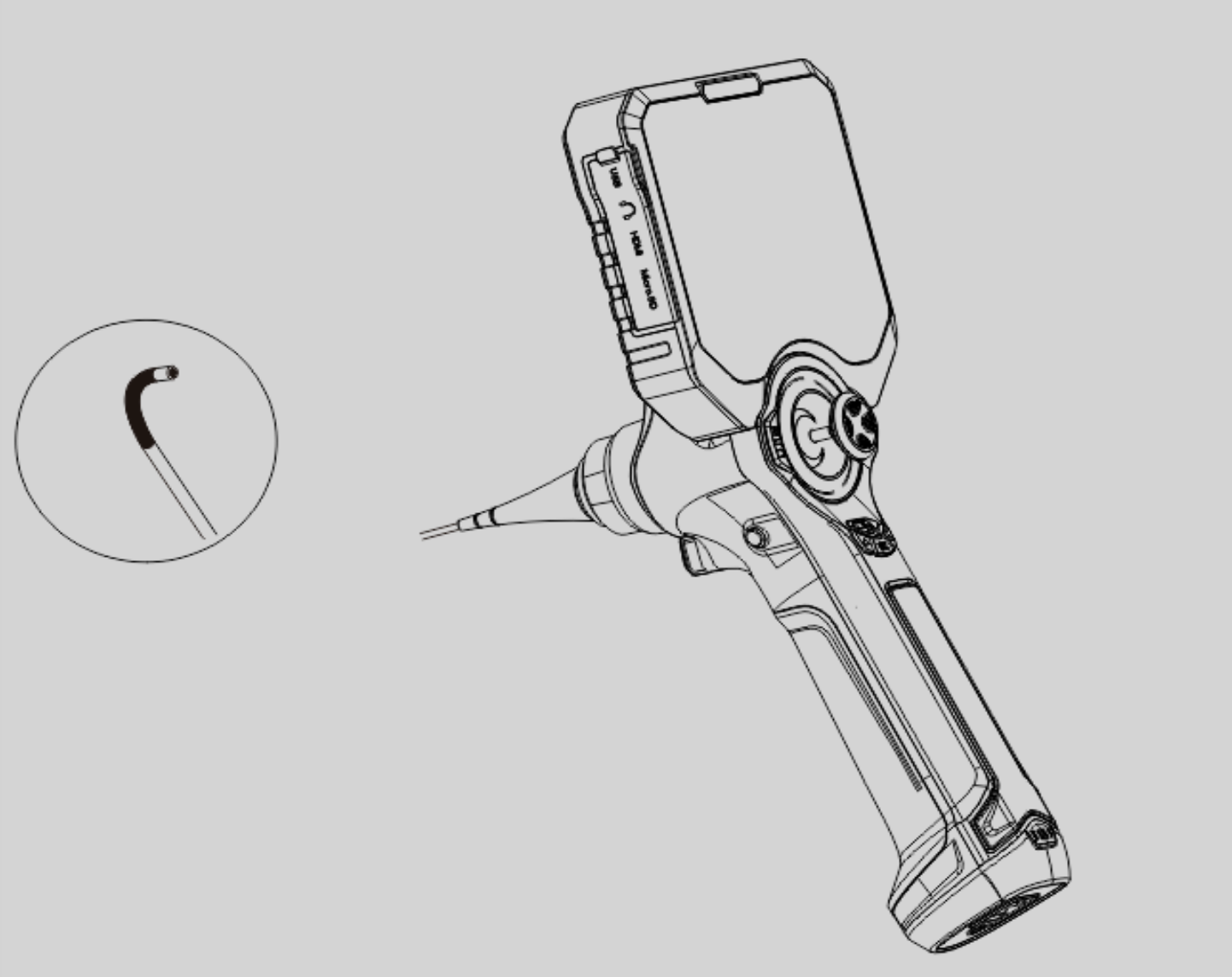

Handheld Videoscope

SRV-J Series

USA BORESCOPES

Safety Recommendations

In order to avoid harm to you and others or affect the service life of this equipment, please read and observe the following "safety precautions" before use. The safety precautions are divided into "warning" and "danger" for explanation.

WARNING **Incorrect operation may cause damage to the equipment**

- Do not stretch or twist the insertion tube of the device with great strength, otherwise it may cause damage to the tube.
- Do not severely hit the probe of this equipment, otherwise it may cause the lens assembly to break.
- Do not use or store this device at temperatures above 60° C or below -20° C.
- Please store this equipment in a dry, non-magnetic, acid-free, and dust-free environment.

Danger **Wrong operation may cause personal injury**

- Keep the device out of the reach of children.
- Do not look directly into the end of the insertion tube. The bright light may hurt your eyesight.
- Keep the device away from acid or alkaline solutions, oil or gasoline, and do not use it in an atmosphere containing volatile/ flammable vapors.
- This device uses a rechargeable lithium battery to supply power. It is forbidden to approach fire sources.

Packing List

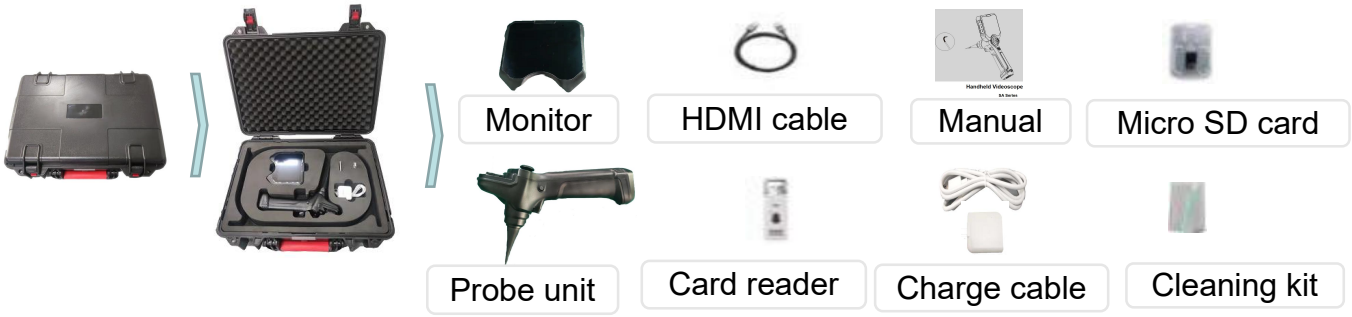

Parts Function

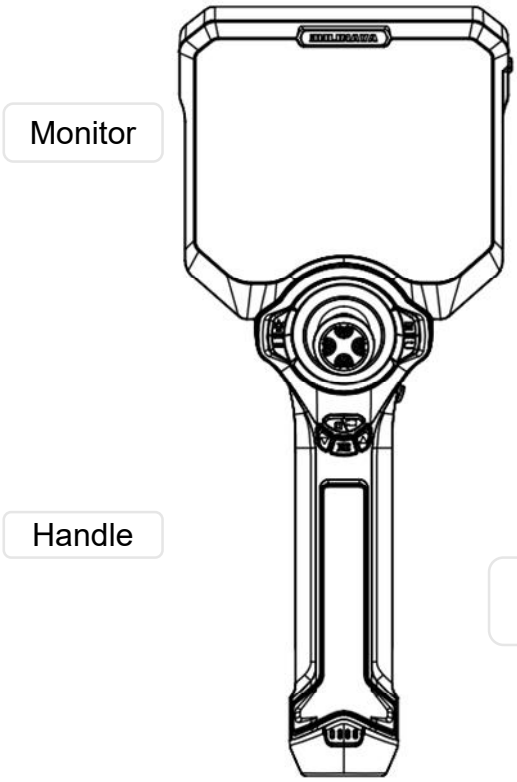

Front View

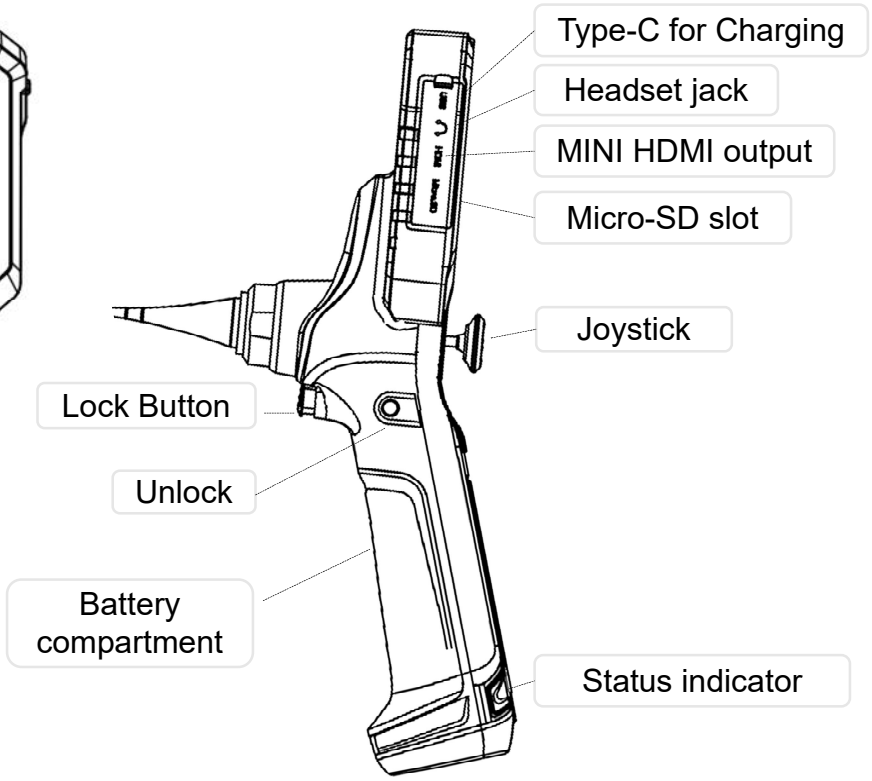

Side View

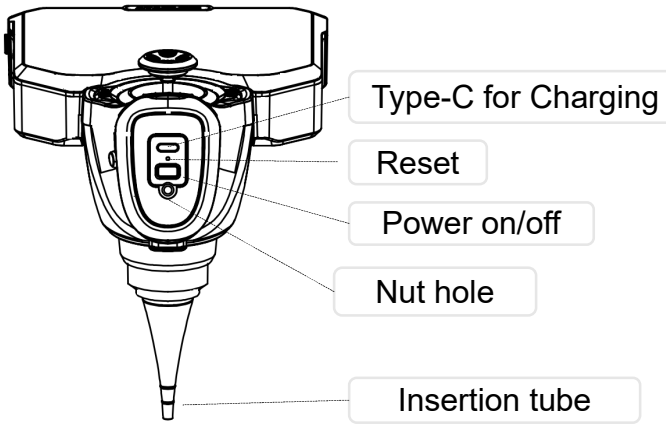

Bottom View

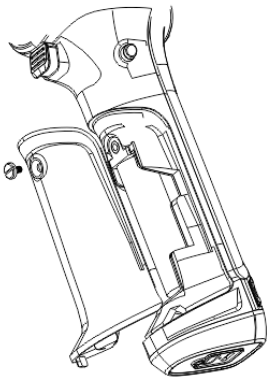

Schematic diagram of opening the battery compartment

Parts Function

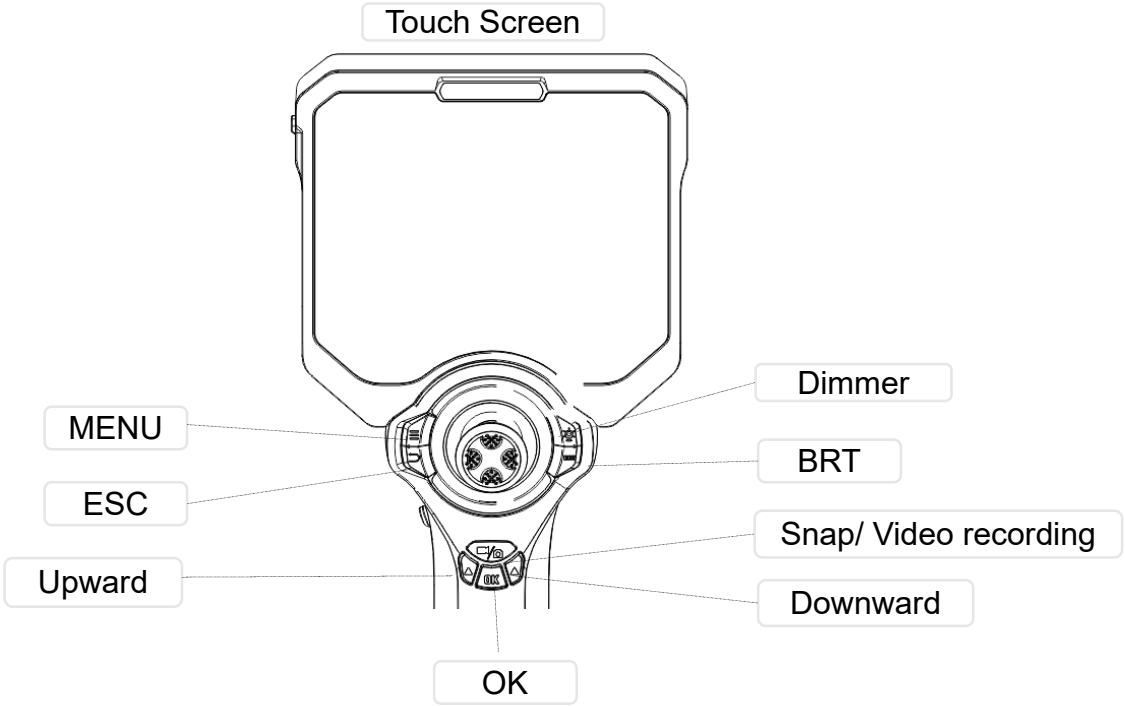

Dimmer

Press the Dimmer button on the handle in sequence to adjust the light of the camera, Level 5→ Level 4→ Level 3→ Leve2→ Level 1→ off.

BRT

Adjusting the EV Value of the camera.

Snap/Video recording

Short press **Snap/Video recording** to take a picture. Long press around 3 secs for video recording.

MENU/Upward/Downward/ESC/OK

Enter the menu bar, use the **Upward**, **Downward**, **ESC** and **OK** keys together to set the parameters of each item in the menu bar.

Note：OK Key also can control intensity of light. In most cases, it is more convenient to realize the same function through the operation of the touch screen.

Quick Setup

Installing

1. Align the **Screen** with the connector slot of the handle as shown in the right figure, and push it in gently. When you hear a click, it means it has been installed in place.
2. Turn the **Sliding key** on the back of the screen to the right to lock the screen and prevent it from loosening during use.
3. When disassembling the **Screen**, unlock the **Sliding key** to the left, then hold the body with both hands, and push out the screen with two thumbs.

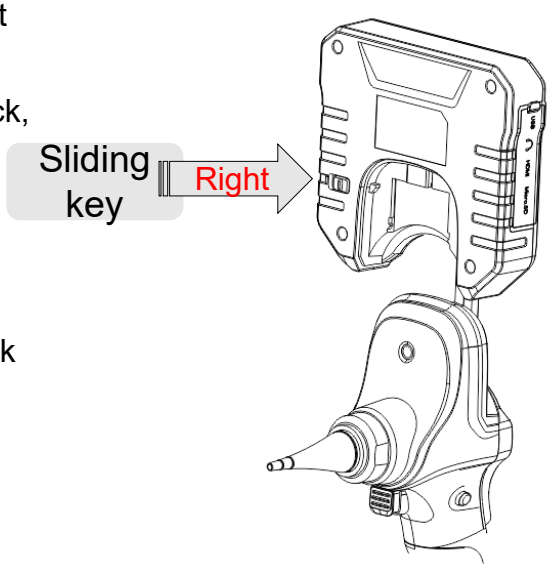

Charging

If you find the low level of power, please plug the Type-C jack to charge, the charging current is 5V 2A, status indicator turns red, the red will change to green when the battery is fully charged.

Ready for use

Please insert the Micro-SD card into the card slot, press power button, wait around 3secs, real - time image appears in screen. Please set the time and date, language, etc for the first time.

Articulation

Use the joystick to articulate the camera tip with 360 degrees.
After adjusting the camera tip to a suitable angle, press the **Lock** button to lock the articulation and camera tip, and press the **Unlock** button to unlock them.

TOOLBAR

After entering the real-time screen, touch the **Hide** button in the lower left corner, and a toolbar will appear on both sides of the screen, using the toolbar to quickly operate and image setting. Touch the **Hide** button again, and the toolbar enters the hidden state.

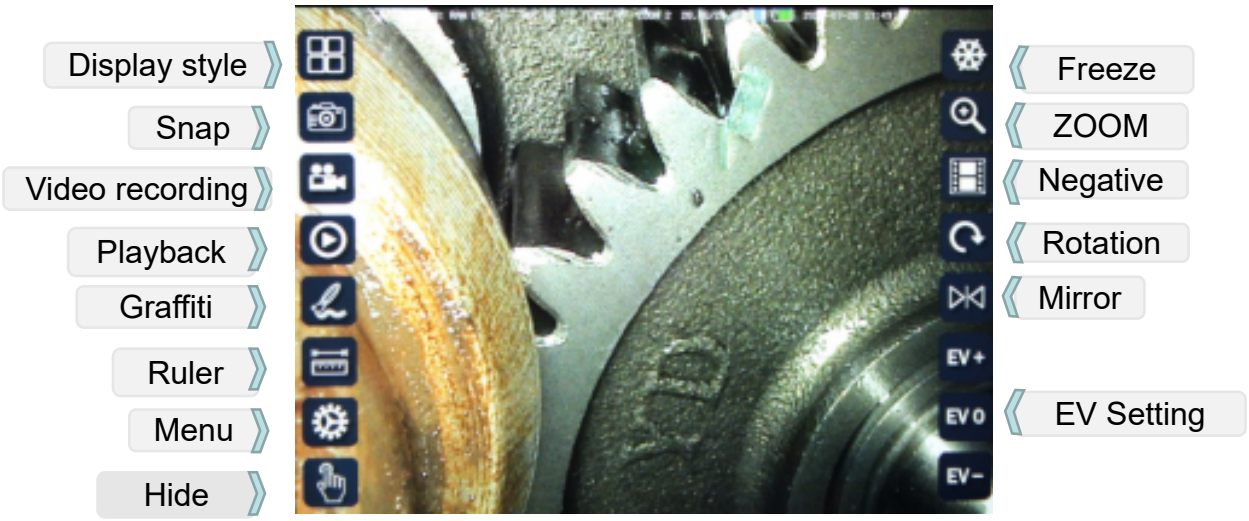

Display style

Three types are optional: Rectangular, Octagonal and Circular.
Note: This function is only applicable to sensor **S20** and **M30**.

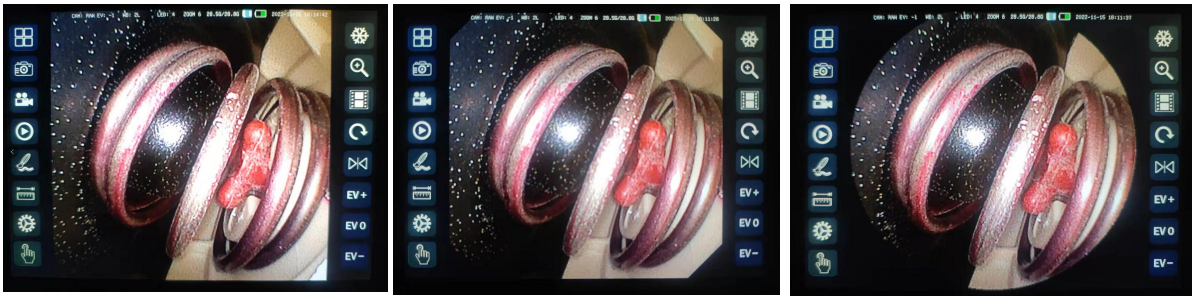

Snap/ Video recording

The display screen live- image can be saved to the SD card in the form of photos and videos, the photos are saved to the PHOTO folder in **JPG** format, and the videos are saved to the VIDEO folder in **MP4** format.

Playback

Enter Display playback,there are three folders, store pictures and videos, Screen -capture for graffiti.
Use the key on the right column to select the file to play or delete.

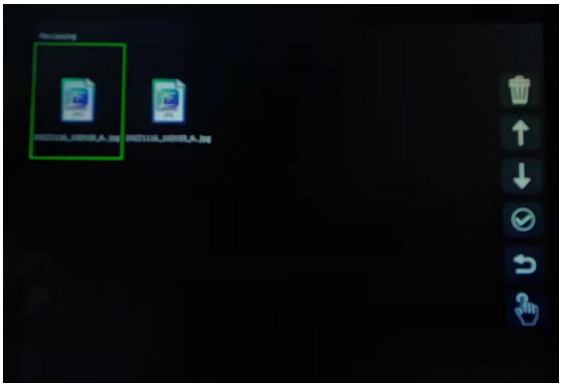

Graffiti

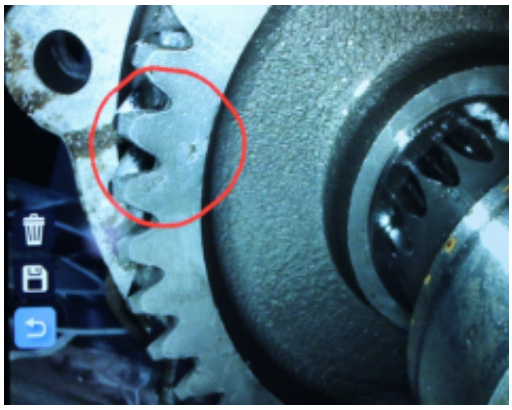

You can sketch or mark on the image and save to folder SCREEN-CAPTURE on SD card.

Ruler

According to the reference object, the size of the target in front of the lens can be estimated.

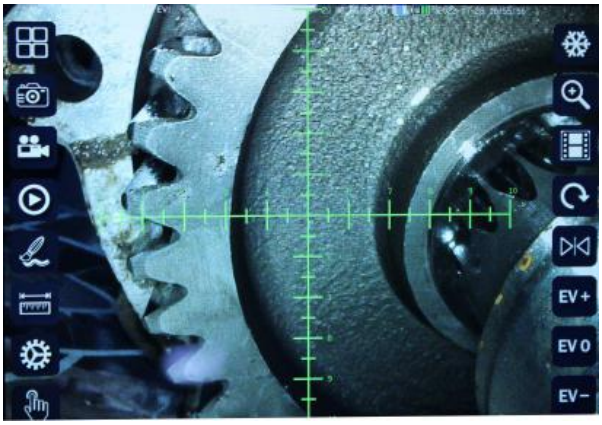

Freeze

The left is frozen image, the live image in the right for comparison.

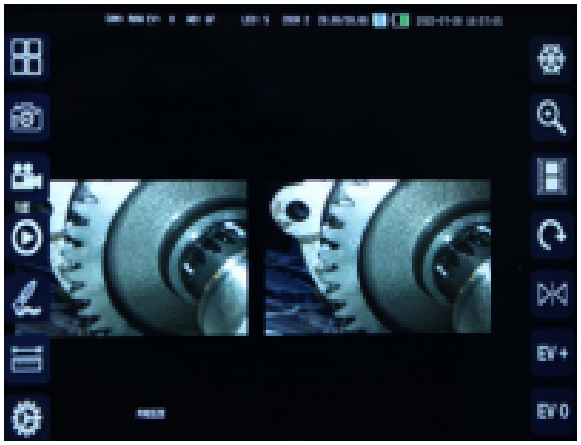

ZOOM

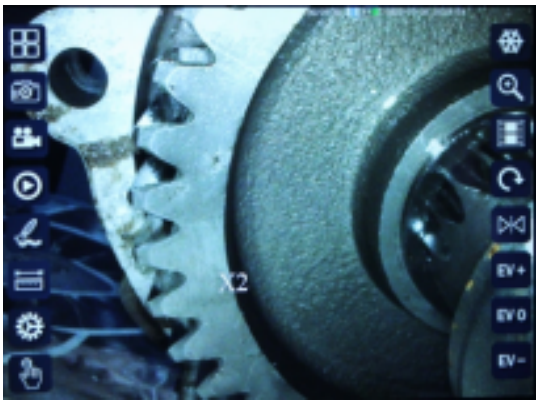

The image can be zoom in or out. Different cameras may have different Zoom levels.

Negative film

Image can be showed in a complementary colors as a negative.

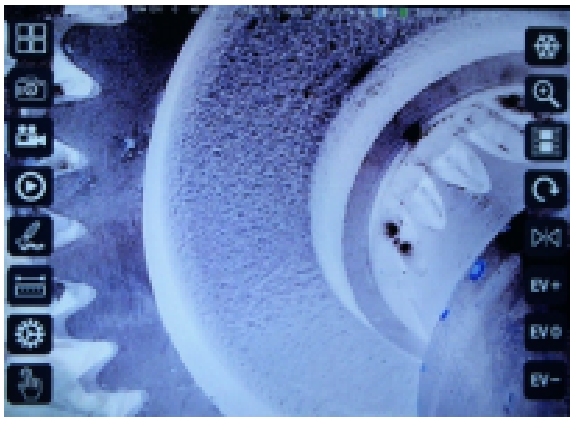

Rotation & Mirror

The image can be clockwise rotation at 90, 180, 270 degrees or mirror showed.

EV Adjustment

Adjusting the EV value can make the lens adapt to different light and dark environments. High EV value may cause overexposure of the bright workpiece surface, and a low EV value can make the details more clearly presented.

Note: The EV value can also be determined by the **BRT** button.

Menu

Enter the menu option, as show the following settings:

Sensor selection

Image setting

Assistance

Playback

System setting

Back

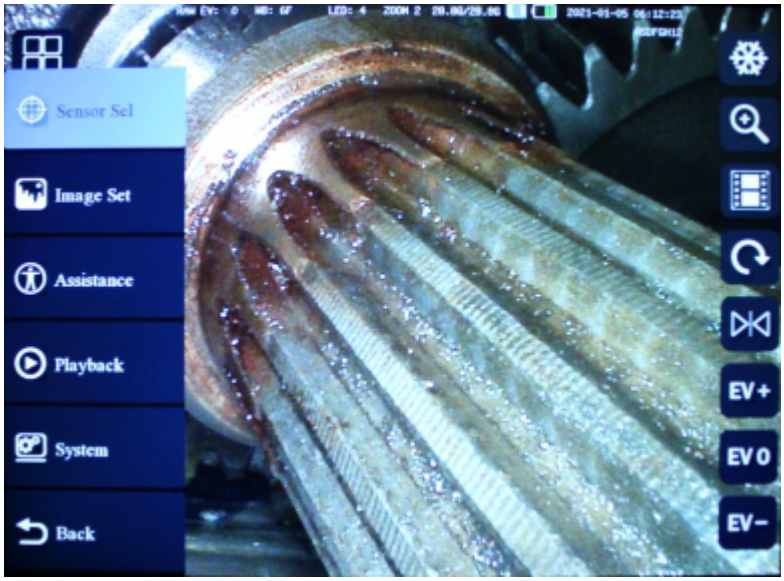

Sensor select

This series can be adapted to various camera sensors, and select the corresponding option according to the probe camera used.

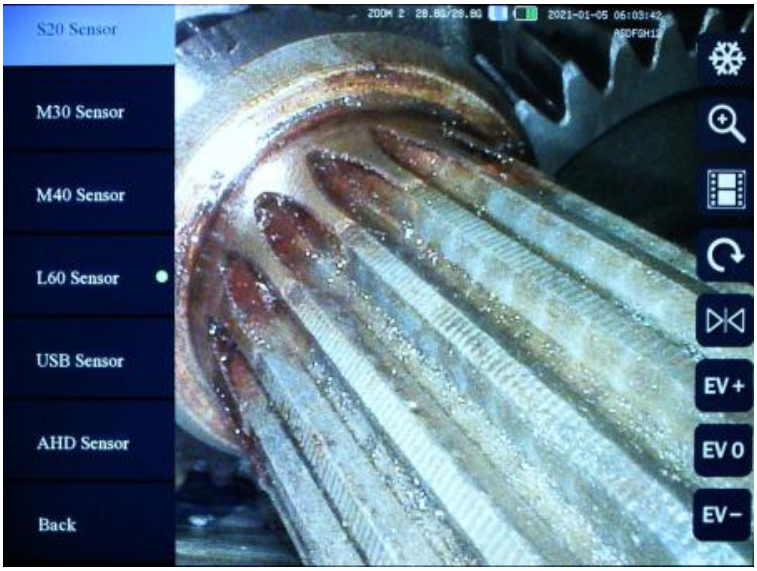

Image Set

The following items can be set in image settings:

White balance

Display style

Negative

Sharp/EV

Image Adjust

Gain setting

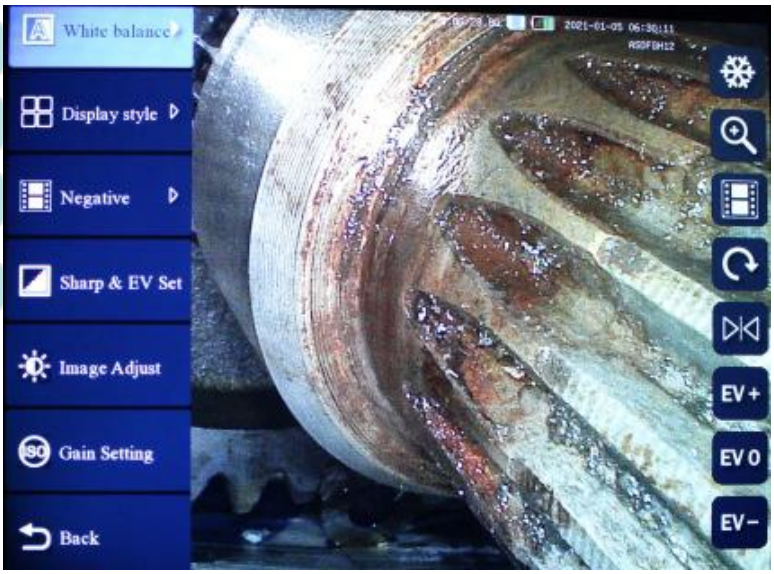

White balance

The product can be adapted to various probes and light, please select this item according to the camera in use.

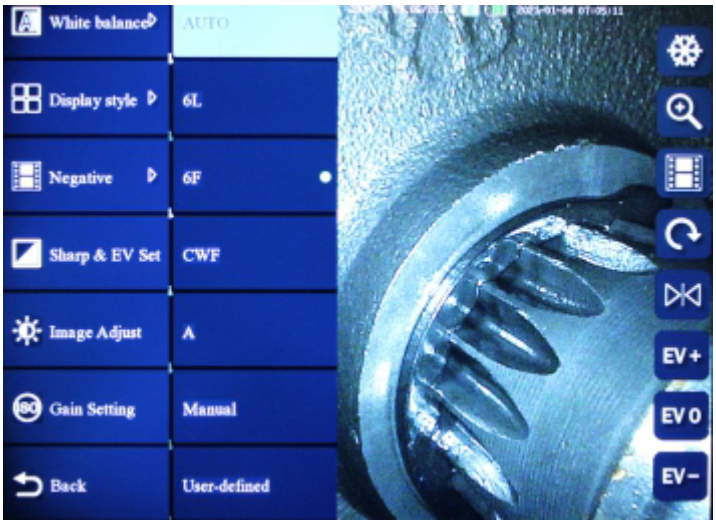

Display style

Please refer to the previous description of TOOLBAR.

Negative

In addtion to the negative film, the black and white function of the picture has been added.

Sharp/ EV Set

Dead point correction(dpf), Sharpness and exp com value can be set by + -, after setting, press the “Exit” + or - to confirm to exit.

If you choose the Default, press + or - to confirm and then press Exit, and +or - to complete the setting.

Image Adjust

Brightness, contrast and saturation value can be set through **+ -** , after setting, press **Exit** key, and **+** or **-** to confirm to exit.

If you choose the Default, press **+** or **-** to confirm and then press **Exit**, and **+**or **-** to complete the setting.

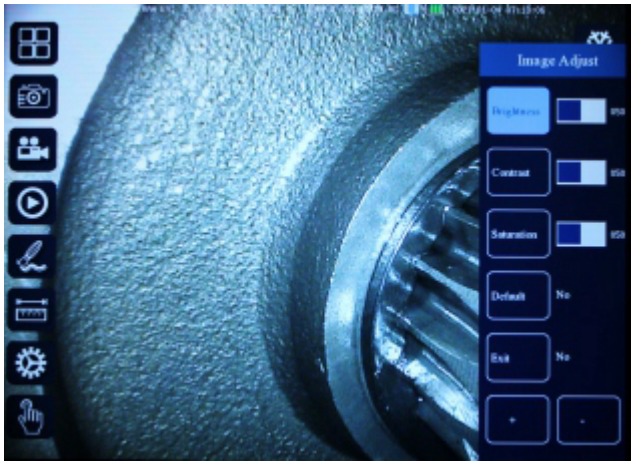

Gain Setting

Automatic or manual mode can be selected through + - , If manual mode is selected, it can be used+- to set the gain value and exposure time. After setting, press Exit, and then press + or - Confirm to exit.

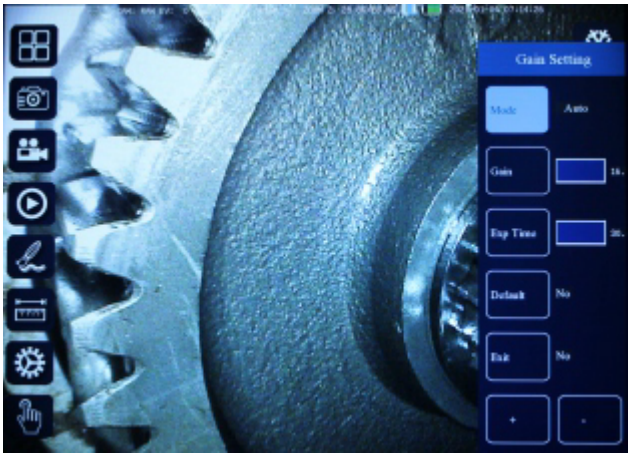

Assistance

Recording time

Volume

Audio Rec

Ruler

Graffiti

Watermark

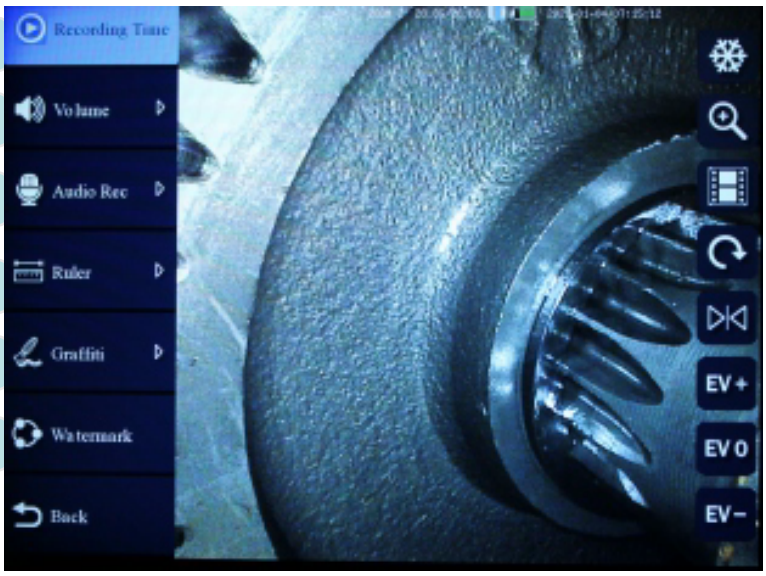

Recording Time

When recording continuously, the recording time of each video file can be set in advance, which can be selected from 3 to 60 minutes.

Volume

To set the sound of the horn.

Audio Rec

Setting whether recording sound while video recording.
(For certain Models)

Ruler

Please refer to the previous toolbar “**Ruler**” description.

Graffiti

Please refer to the previous toolbar “**Graffiti**” description.

Watermark

Date and text watermarks can be added to photos and videos. The date watermark will be automatically added to the pictures and videos taken after you just open it.

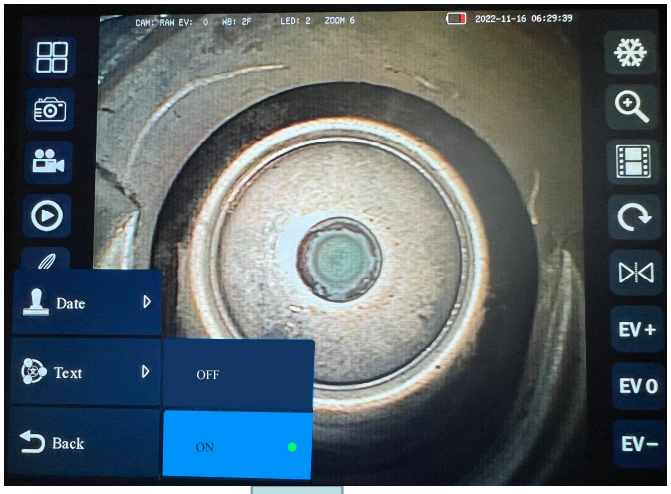

After text watermark is selected to open, it will automatically jump to the editing keyboard, enter characters or numbers and press **OK** to save. The watermark of the entered content will be added to the pictures or videos taken afterwards.

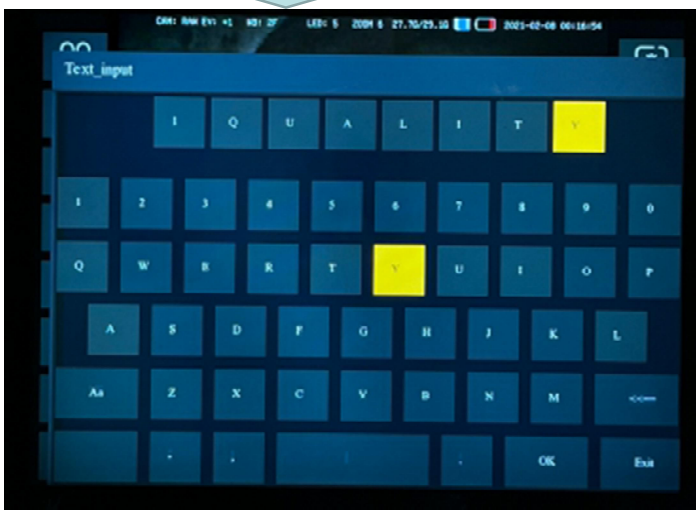

Note: Only input should up to 8 characters can be displayed.

Playback

Please refer to the previous description of TOOLBAR.

System setting

The following items can be set in the system settings.

Language

HDMI

System

WiFi

Date

Format

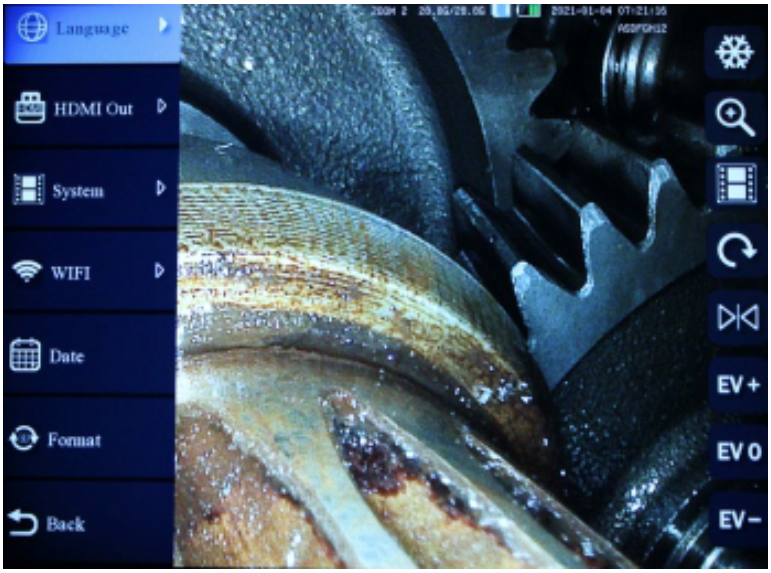

Language

You can select the language used by the system.

HDMI

HDMI cable can connect to external screen to display, according to external screen to select appropriate parameters.

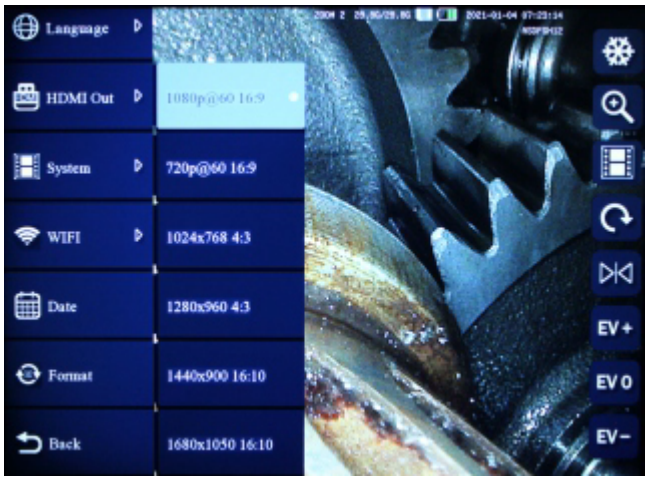

System

The system version can choose to return to the default or upgrade by inserting SD card containing system software.

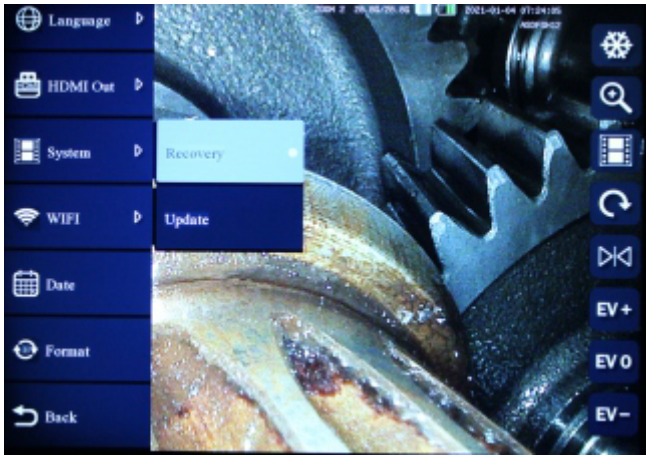

WiFi

You can activate or turn off Wi-Fi transmission. (For certain models)

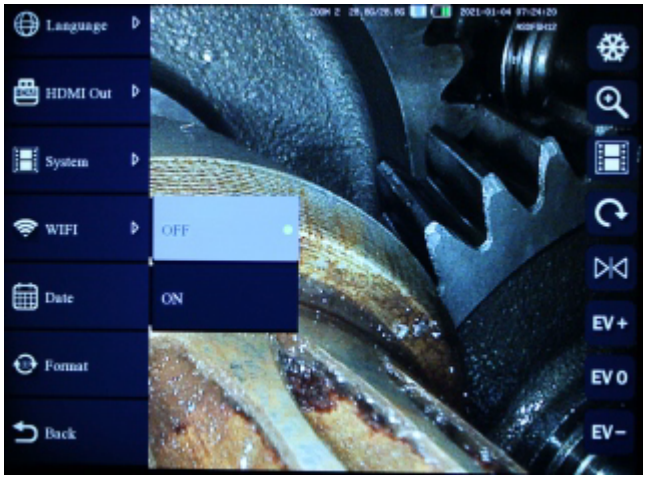

Date

To set the date and time of the system, it is recommended to set the local time and date when using it for the first time.

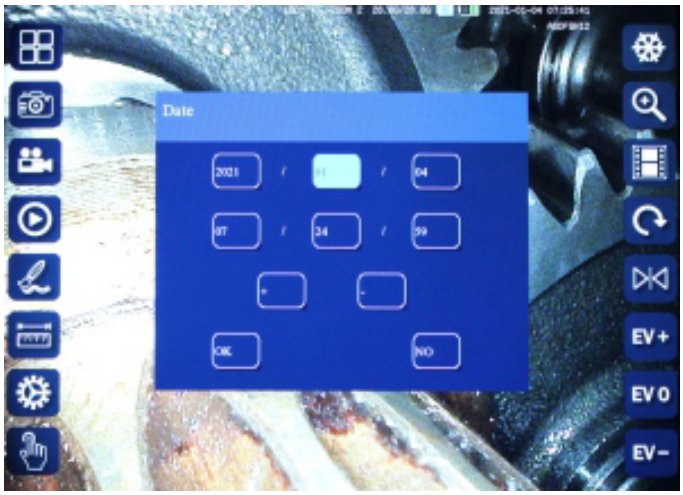

Format

This item can format the SD card, please back up your files before formatting.

Storage & Maintenance

After the device is used, restore the probe articulation tip and camera to the straight state before use, turn off the device, remove the screen, and then clean and maintain according to the following procedures.

Cleaning distal end

Grasping the rigid portion of camera end,use a clean soft piece of gauze or cotton swabs to wipe off dirty and water. Best results may be obtained using commercially available absolute ethanol.

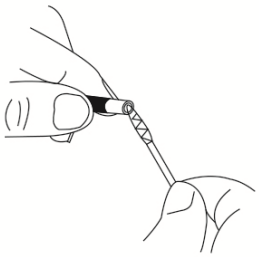

Cleaning insertion tube

Wipe thoroughly with a piece of gauze or other material moistened with neutral detergent, next clean by gauze moistened with clear water,and then wipe the insertion tube dry off all moisture.

Cleaning Handle and Screen

Wipe clean with a soft cloth.

Storage precautions

After cleaning, please place the equipment and accessories in order according to the groove position in the carry case and fix the probes. Be sure to store the equipment in a dry, clean and suitable temperature place.

Troubleshooting

Q: What should I do if the device cannot be turned on?

A: Connect the power adapter to the charging port of the display for charging.

Q: What should I do if there is no picture or light on the screen?

A: Reassemble the screen and handle, and then press the power button to turn on the device.

Note: Remove the probe protective cover before use.

Q: What should I do if the image is too dark or too bright?

A: The BRT button at behind of control unit to adjust the brightness value. (Please operate according to the manual)

Q: What should I do if the light of the probe is too dim?

A: Press the dimmer to get right light intensity.

Q: What should I do if I can not take photos or record videos?

A: The Micro-SD card is missing, incorrectly inserted, full or malfunctioning, try to format or replace it with a new one.

Q: What should I do if the screen is stuck, garbled, or white screen?

A: When all the function keys freeze or fail, insert the insulated needle into the resethole on the side of the monitor, and restart the device to see if the problem can be solved.

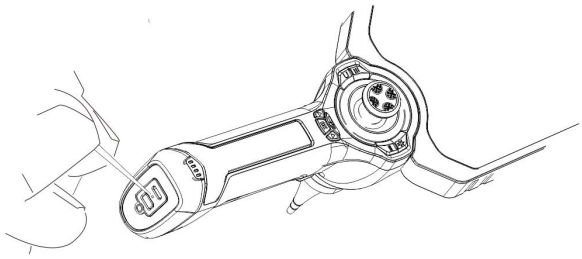

Caution

If the device has any problems other than those mentioned above or it cannot be solved after repeated restarts, please contact your dealer for help immediately. Do not disassemble, repair or modify the device by yourself.

System Parameters

LCD Panel	5″ High resolution Touch Screen LCD Support Micro-SD Card storage, HDMI Video output
Power source	Lithium battery: 3350mAhx2 3.7V Charging current: 5V/2A
Opreating Temperatures	Distal end and insertion tube:0- 60° C
	Other parts:0-40° C
Operating Humidity	15-90% RH
Waterproof	IP67 Insertion tube only